REVISIONS						
ZONE	LTR.	DESCRIPTION	ECN NO.	DATE	BY	APPR'D
	REL	RELEASED FOR PRODUCTION	71654	03OCT08	SLK	DJC

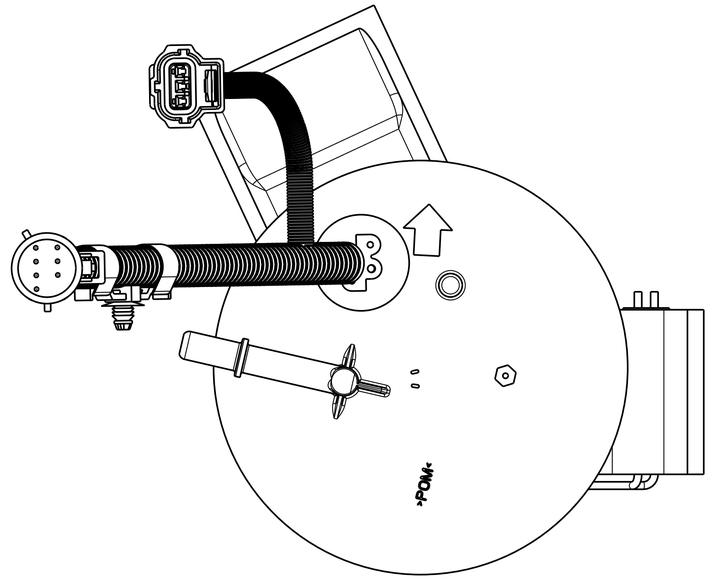

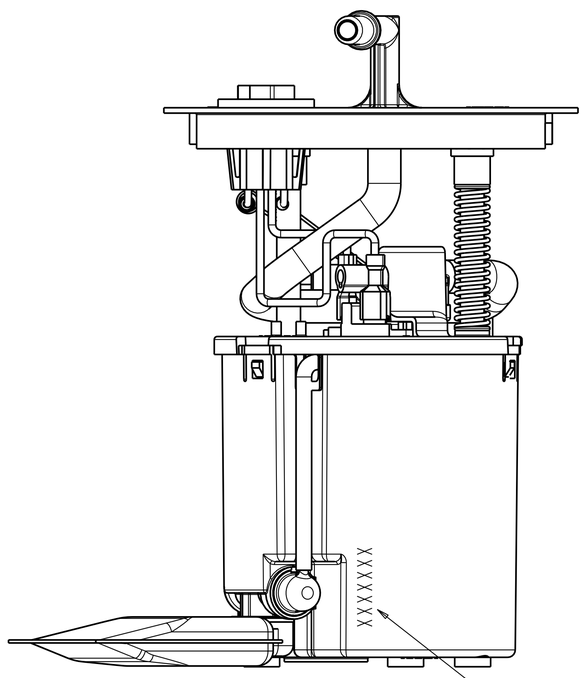

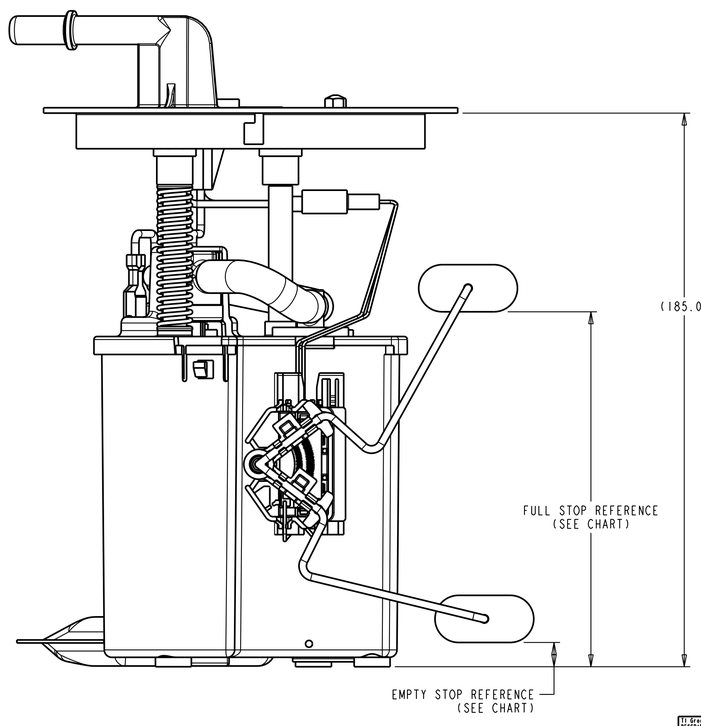

NOTE:

1. SPECIAL CUSTOMER PACKAGING REQUIREMENTS MAY CALL FOR THE ADDITION OF SPECIFIC LABELS NOT SHOWN ON THIS DRAWING

FLOAT POSITION	RESISTANCE (OHMS)
FULL STOP (118.0)	160.5±3.0
EMPTY STOP (10.0)	15±1

TI Group CLAIMS PROPRIETARY RIGHTS TO THE SUBJECT MATTER SHOWN AND DESCRIBED ON THIS DRAWING. THE DRAWING IS PROVIDED FOR REFERENCE PURPOSES ONLY. BY ACCEPTANCE OF THIS DRAWING, RECIPIENT AGREES THAT IT SHALL BE HELD IN STRICT CONFIDENCE AND NEITHER IT NOR ANY REPRODUCTION THEREOF WILL BE DISCLOSED TO OTHERS OR USED FOR THE PURPOSE OF MANUFACTURE OR PROCUREMENT FROM OTHERS OF THE ARTICLE OR PARTS SHOWN THEREON WITHOUT EXPRESS AND WRITTEN CONSENT FROM TI Group. NO LICENCE OR OTHER RIGHT IS GIVEN OR SHALL BE ASSUMED BY PROVISIONS OF THIS DRAWING TO RECIPIENT.

◪ DENOTES ASSEMBLY/TEST/PROCESS
Ⓢ DENOTES SAFETY CHARACTERISTIC
◇ DENOTES SIGNIFICANT CHARACTERISTIC

INTERNAL USE ONLY DISTRIBUTION CODE

REF.

DO NOT SCALE PRINT

DIMENSIONS AND TOLERANCES PER ANSI/ASME Y14.5M - 1994

PRO-E

PROJECTION

SIZE: D

TOLERANCE UNLESS OTHERWISE SPECIFIED:
X ±0.76
.X ±0.25
.XX ±0.13
ANGLE ±1/2°
CONCEN. 0.08

MATERIAL

FINISH

TI Automotive
AFTERMARKET DIVISION
630 COLUMBIA STREET
CARO, MI 48723

SCALE: 1:1
DATE: 03OCT08
DRN. BY: S.KADY
CHK'D BY:
APPR'D BY: D.CATLIN

TITLE: FUEL MODULE OUTLINE (TU236)

DRAWING NO. FM0002182

REV. REL